1833400102

MANUAL

CA,CE,CP,CR44/54

Installation manual

183-3400-102 English 03101.10

Installation and service for the following units:
CA44/54, CE44/54, CP44/54 and CR44/54.

1. Installation and service 1-1
1.1 Installation notes 1-1
1.2 Installation of XX44 1-3
1.3 Installation of XX54 1-5
1.4 Location for display unit 1-7
1.5 Installation of DS44/54 Dual Station 1-7
1.5.1 Operation of DS44/54 Dual Station 1-8
1.6 Connection of Radar supply box RS4050 or RS4052 1-9
1.7 Electrical connections 1-10
1.7.1 Power supply connections 1-12
1.7.2 Fuse 1-12
1.7.3 Transducer connection 1-12
1.7.4 NMEA0183 interface connection 1-14
1.7.5 PC up/download via NMEA connection 1-14
1.8 Universal connection cable (option) 1-14
1.9 Installation of antenna 1-15
1.10 Optional connections 1-16
1.11 Basic transducer and cable information (CA & CE models) 1-17
1.11.1 Transducers (option) 1-18
1.11.2 Determining the position for the transducer 1-21
1.12 Installation of scanner unit (CA & CR models) 1-23
1.12.1 Shifting away from obstacles 1-24
1.12.2 Mounting of scanner 1-25
1.12.3 Connecting cables 1-29
1.12.4 Connector’s pin numbers and wire colors 1-35
1.12.5 Grounding wire 1-37
1.12.6 Initial adjustments of radar function 1-38
1.13 Specifications 1-38

List of Simrad distributors

1. Installation and service

1.1 Installation notes

For a number of reasons, all user-related decisions, setups, etc. should be noted in these two pages as they occur. This information may be helpful if your unit has been updated with new software, reset or in for service.

Radar setup	
Scanner type	
Antenna height	
Heading adjust	
Tuning reference	
Zero range/timing	
Sensitivity	

Echo setup	
Transducer	
Depth	
Frequency	
Keel depth	

Other important settings:		

1.2 Installation of CA/CE/CP/CR44

The unit can be flat or bracket mounted - overhead, bulkhead or console.

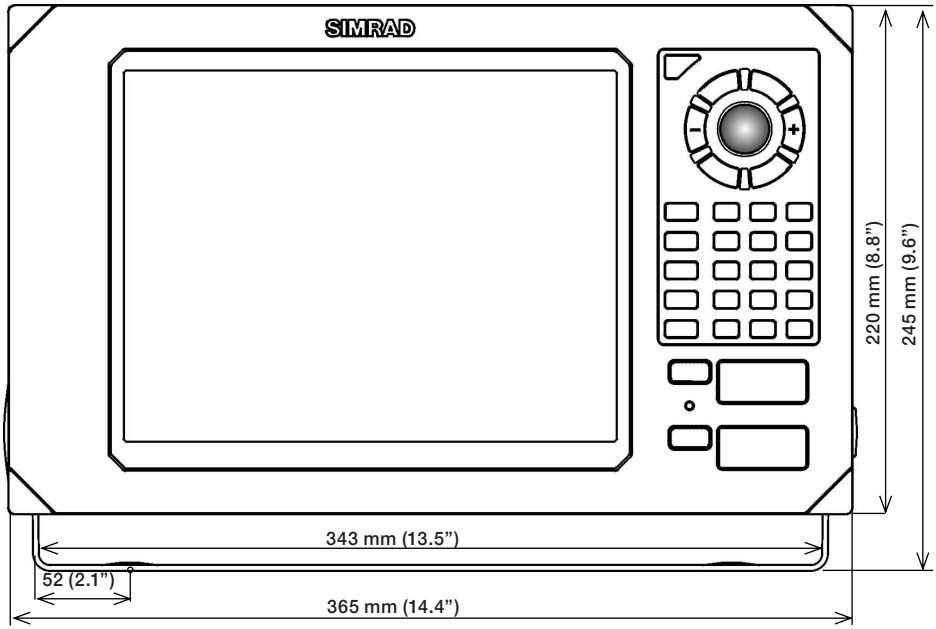

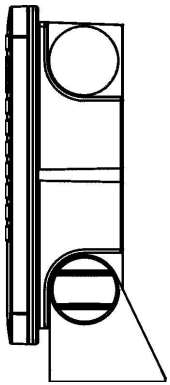

Console mounting.

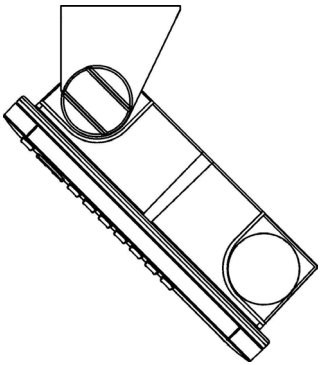

Overhead mounting.

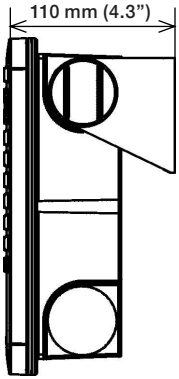

Bulkhead mounting.

Flush mounting

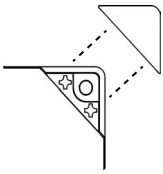

Removable corner
for flush mounting.

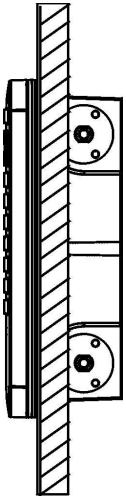

Minimum clearance
for cables: 15 cm.

Refer to included template for instructions on flush mounting.

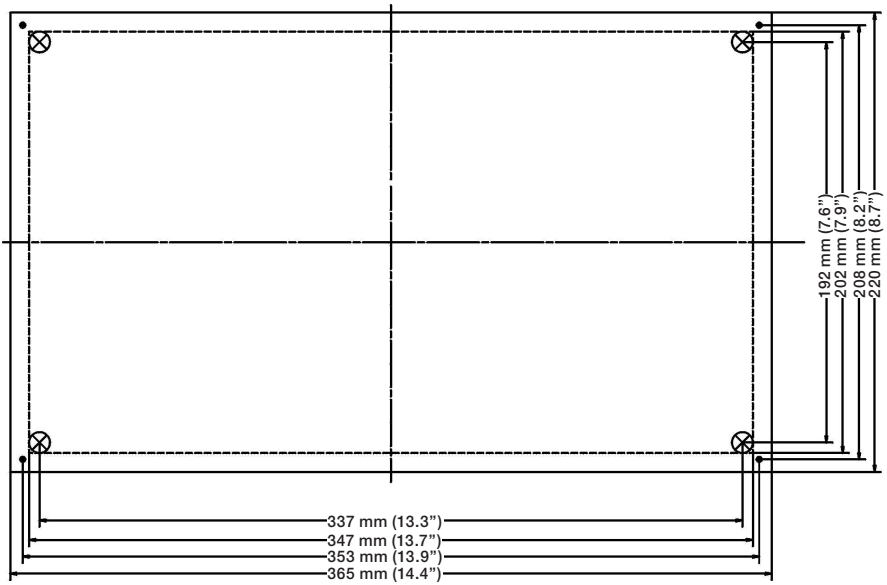

1.3 Installation of CA/CE/CP/CR54

The unit can be flat or bracket mounted - overhead*, bulkhead* or console.

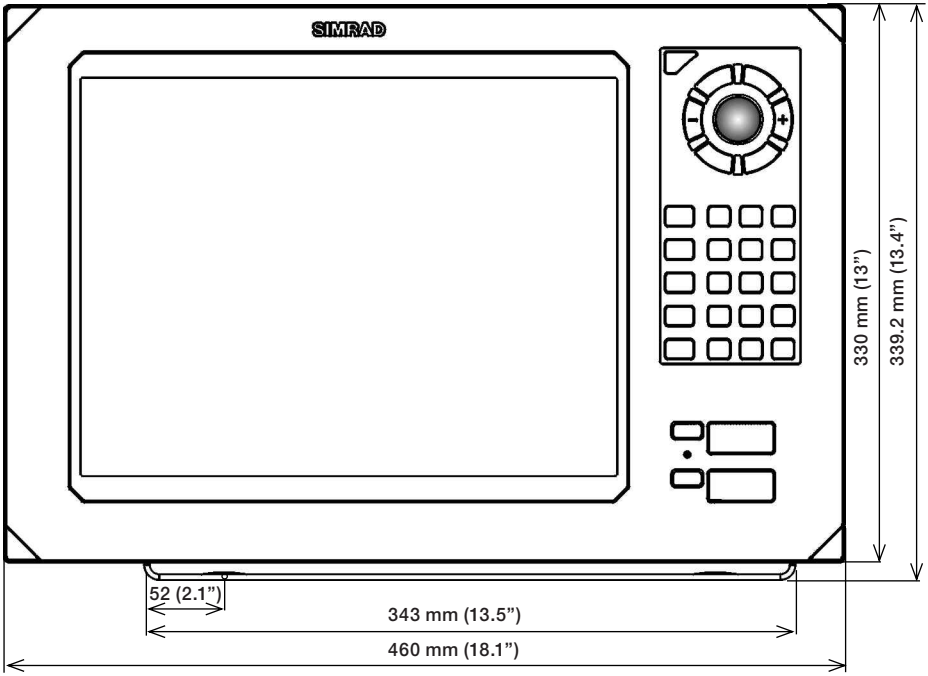

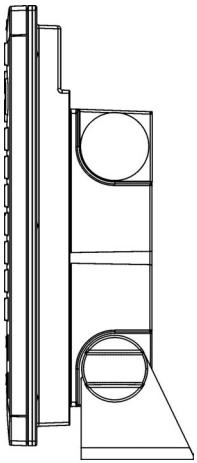

Console mounting.

* Overhead and bulkhead mounting is only possible if using a distance piece.

Flush mounting

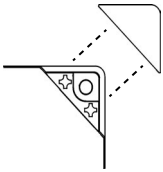

Removable corner
for flush mounting.

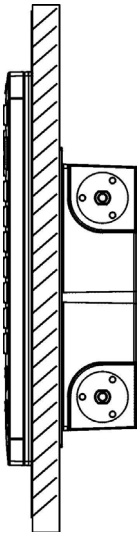

Minimum clearance
for cables: 18 cm.

Refer to included template for instructions on flush mounting.

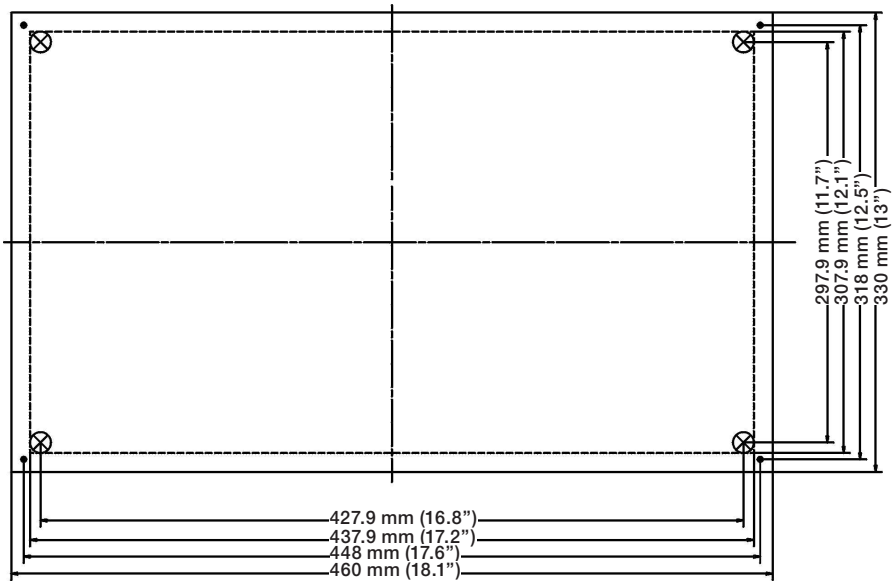

1.4 Location for display unit

Determine which place is the most suitable and convenient for navigation and general operation after considering the following conditions:

- you can see the ship's bow when you raise or lower your eyes from the display.
- there is limited exposure to direct sunlight to avoid overheating - see environment temperature limits in 1.13 Specifications.
- there is good ventilation and minimum vibration.
- the minimum distance to a magnetic compass is 650mm (25.6").
- provide sufficient space behind the unit to allow for proper cable connections to the rear panel connectors.

1.6 Installation of DSXX Dual Station

The DS models are remote control units for all the main unites in the 44/54-series i.e. model numbers starting with the letters CA, CE, CP and CR. The units with the same model numbers are identical in size e.g. DS44 and CE44, so the same installation guides can be applied when performing the installation. When choosing a dual station, the unit does not have to match the main unit in size, as all the mentioned units are compatible. The dual station can be ordered with a specific keypad to match the keypad of the main unit. There are two types to choose from, one for the CE and CP units, and one for the CA and CR units.

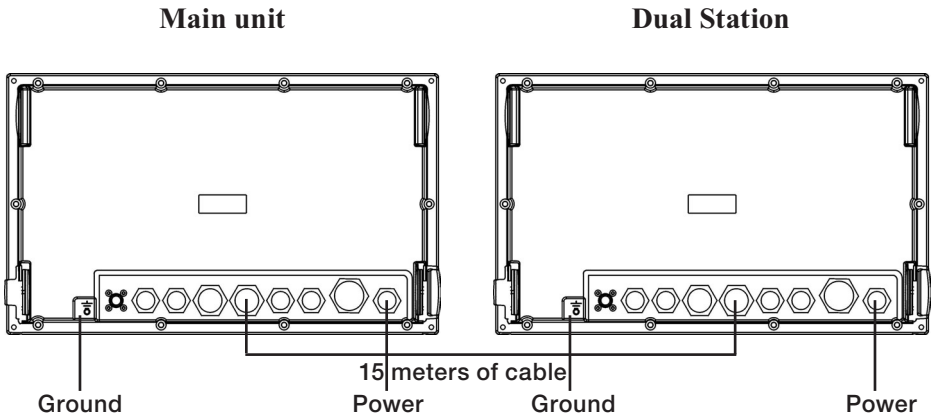

A special connection cable (183-3002-023) of 15 meters with two male plugs is supplied with the DS44/54. Push one of the male plugs into the receptacle marked NMEA1 on the back of the XX44/54 and the second into the DS44/54.

The NMEA1 interface from the main unit is transferred to the dual station via the connection cable and is available on the dual station's NMEA2 receptacle.

☞ Refer to section 1.7 for details on pin numbers.

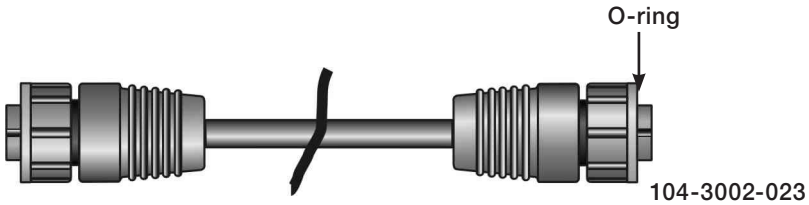

The connection cable between the dual station and the main unit is a special pair-twisted cable of 15 meters (max. 25 meters), which consists of the following wires:

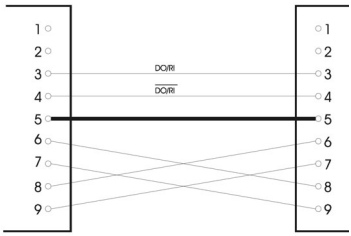

1.5.1 Operation of DS44/54 Dual Station

The main unit and the dual station operate in parallel. All key commands are relayed to the main unit and the display picture is instantly transferred back via a high speed data bus (HSDb).
Adjust light/contrast in screen and background light in keypad via the [PWR] key. The eject keys and cartridge drawers are blinded and can not be opened on the dual station.

1.6 Connection of Radar supply box RS4050 or RS4052

To run the radar function, an external power supply must be connected to the CA44/54 and CR44/54.

☞ Be carefull to choose the correct supply box for the connected scanner.

The **RS4050** will supply sufficient power to run the 2kW and 4kW scanners. Addendum no. 183-0700-003 with instructions and template for mounting.

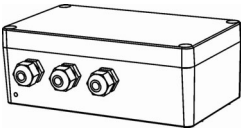

Dimensions: 125x222x81mm

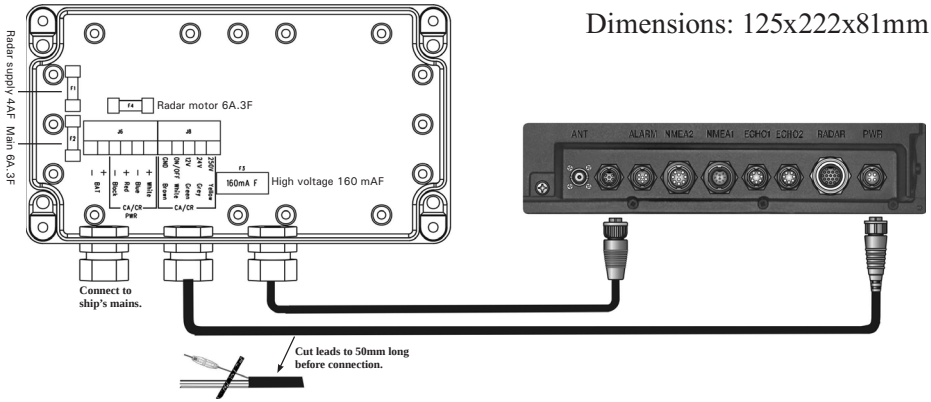

Cable to ship's mains: 2x2.5mm^2 (AWG13), max.5m long (not included).

The **RS4052** is needed to run the 6kW and 12kW scanners. Addendum no. 183-0700-004 with instructions and template for mounting.

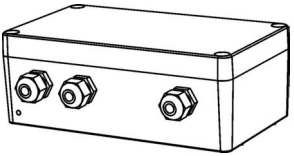

Dimensions: 161.9x263x91mm

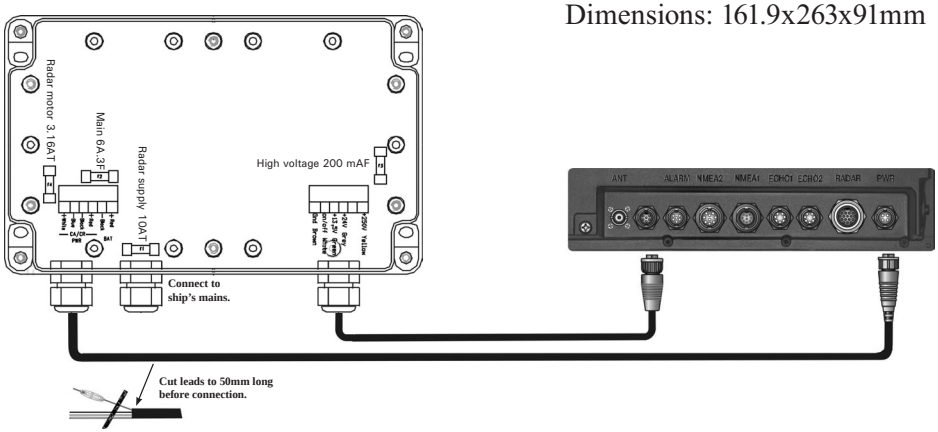

1.7 Electrical connections

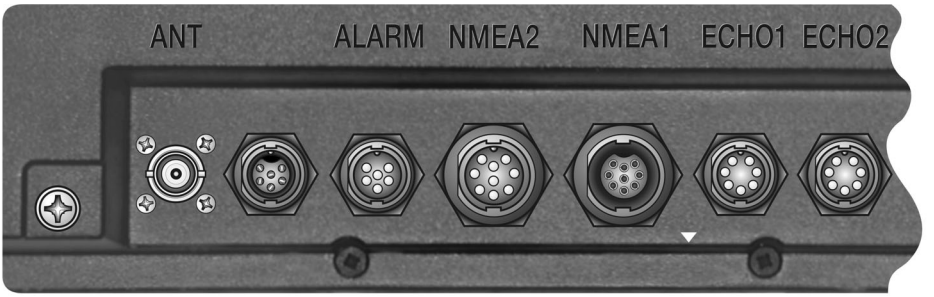

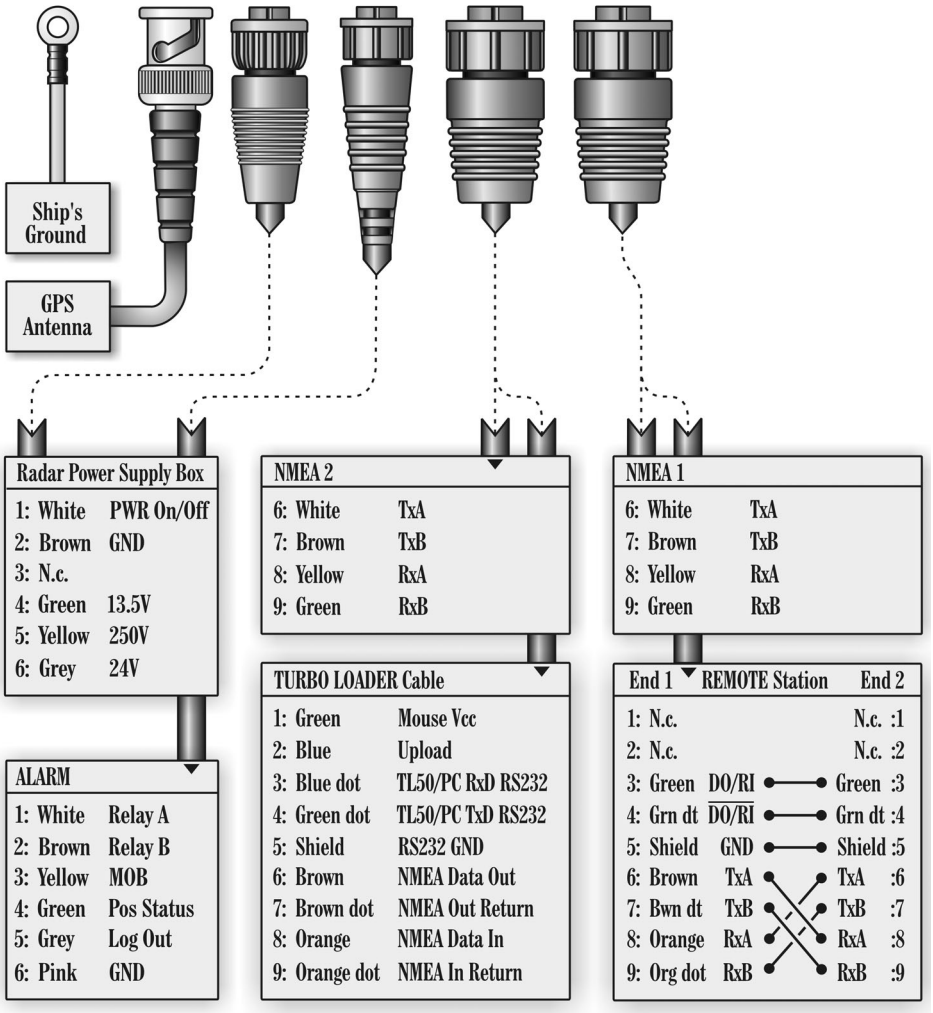

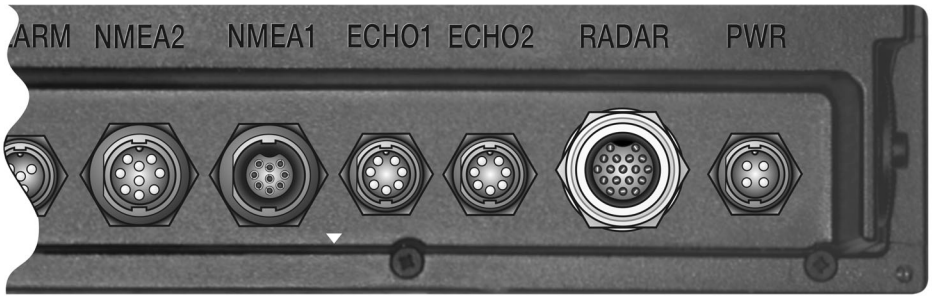
ARM
NMEA2
NMEA1
ECHO1
ECHO2
RADAR
PWR

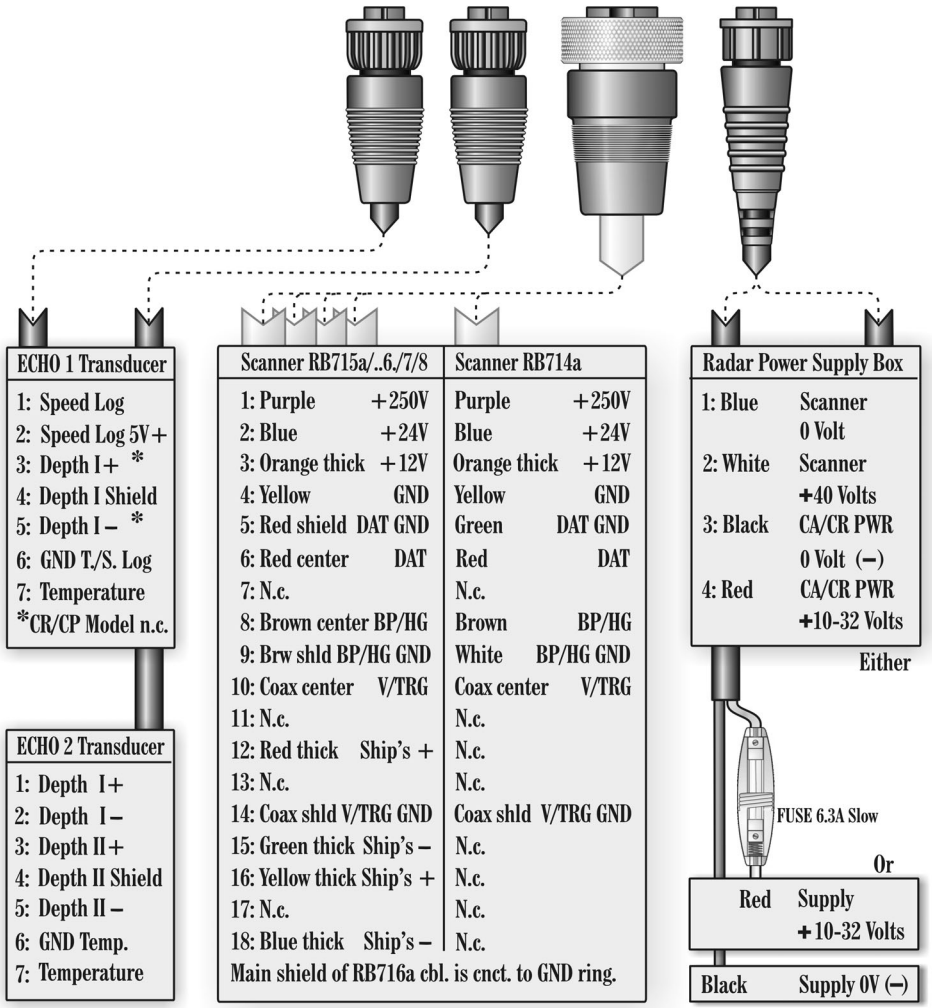
ECHO 1 Transducer
1: Speed Log
2: Speed Log 5V+
3: Depth I+ *
4: Depth I Shield
5: Depth I – *
6: GND T./S. Log
7: Temperature
*CR/CP Model n.c.
ECHO 2 Transducer
1: Depth I+
2: Depth I–
3: Depth II+
4: Depth II Shield
5: Depth II –
6: GND Temp.
7: Temperature
Scanner RB715a/..6./7/8
Scanner RB714a
1: Purple +250V
Purple +250V
2: Blue +24V
Blue +24V
3: Orange thick +12V
Orange thick +12V
4: Yellow GND
Yellow GND
5: Red shield DAT GND
Green DAT GND
6: Red center DAT
Red DAT
7: N.c.
N.c.
8: Brown center BP/HG
Brown BP/HG
9: Brw shld BP/HG GND
White BP/HG GND
10: Coax center V/TRG
Coax center V/TRG
11: N.c.
N.c.
12: Red thick Ship's +
N.c.
13: N.c.
N.c.
14: Coax shld V/TRG GND
Coax shld V/TRG GND
15: Green thick Ship's –
N.c.
16: Yellow thick Ship's +
N.c.
17: N.c.
N.c.
18: Blue thick Ship's –
N.c.
Main shield of RB716a cbl. is cnct. to GND ring.
Radar Power Supply Box
1: Blue Scanner 0 Volt
2: White Scanner +40 Volts
3: Black CA/CR PWR 0 Volt (–)
4: Red CA/CR PWR +10-32 Volts
Either
FUSE 6.3A Slow
Or
Red Supply +10-32 Volts
Black Supply 0V (–)

1.7.1 Power supply connections - refer also to section 1.6

The internal voltage regulator will allow the XX44/54 to operate normally within the power supply voltage range from 10 to 32 V DC. The XX44/54 is connected to external power (battery or radar supply box) by means of the supplied power cable, which is approximately 2 meters long and is not extendable. After connecting the cable to the power source, push the plug as far as it will go into the four pin receptacle marked “PWR” on the rear of the cabinet and turn the plug’s coupling ring clockwise until it makes a click.

1.7.2 Fuse

Warning! A fuse should always be installed to protect the unit.
Using a fuse which is not specified for your equipment can cause it to blow the instant the XX44/54 is switched on or it will not protect the equipment as intended – see fuse rating in section 1.13 Specifications.

1.7.3 Transducer connection (CA & CE models)

Most transducers are supplied with a 10 meter cable for connection to the echosounder unit – CA & CE44/54. Push the female plug, as far as it goes, into the receptacle marked “ECHO1” or/and “ECHO2” on the rear of the cabinet and turn the plug’s coupling ring clockwise until it clicks into locked position
☞ The CA & CE44/54 must be turned off while connecting/disconnecting the transducer cables.

Recommended connection and setup of Simrad supplied transducers:

Transducer type	Port	Echosounder setup
Simrad 50/200 C	ECHO2	Simrad Combi C50/200
Simrad 38/200 C	ECHO2	Simrad Combi C38/200
Airmar B250	ECHO2	Airmar Combi B250-22
Airmar B260	ECHO2	Airmar Combi B250-22
Airmar P319, P52, P66, B117, B45, SS505, B744V, SS544V, B256	ECHO1	200kHz Airmar Des. A 50kHz Airmar Des. A
Airmar ST650	ECHO1	

☞ See Transducer connections next page, and Echosounder setup in Operator’s manual.

Transducer connections:

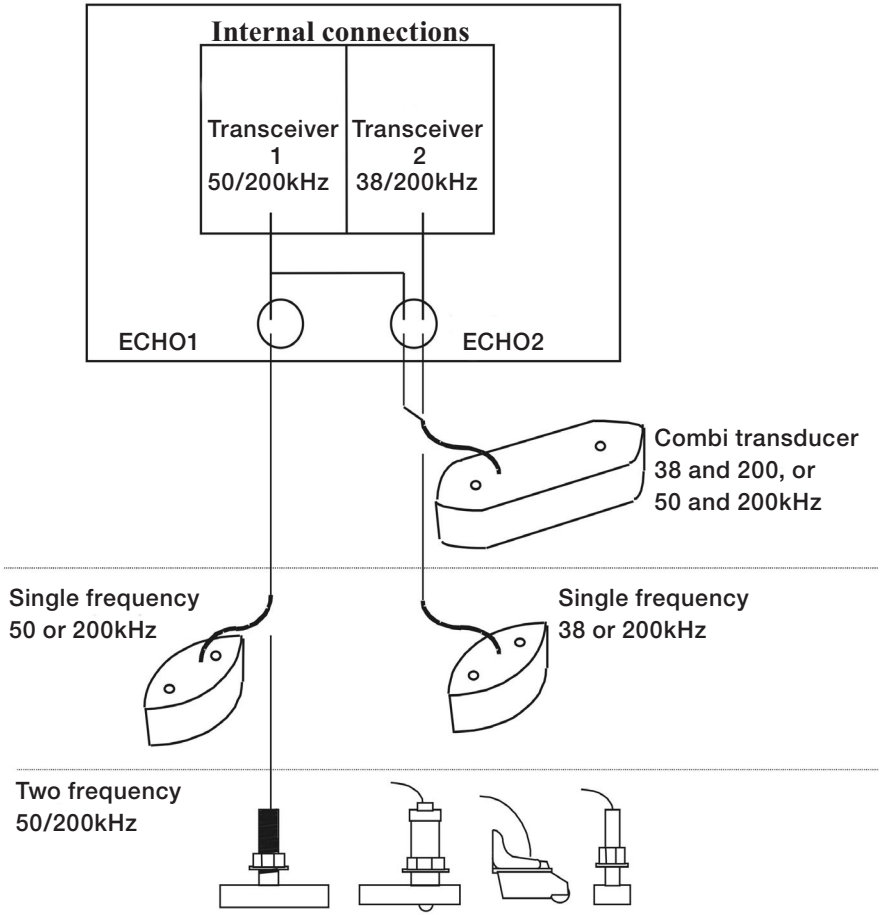

⚠ **Warning!**
Transducers containing speed log sensor e.g. Airmar B744V must never be connected to the port “ECHO2”. To avoid accidental connection, “ECHO2” is sealed with a small silicone plug, which of course is removable so e.g. a combi transducer can be connected.

1.7.4 NMEA0183 interface connection

NMEA0183 interface connections are made to the receptacle marked "NMEA1" or "NMEA2" on the rear of the cabinet – turn the plug's coupling ring clockwise until it stops.

☞ The XX44/54 must be turned off while connecting/disconnecting the interface cable.

1.7.5 PC up/download via NMEA connection

A PC can be connected via the NMEA port to enable exchange of waypoint and route data. See 1.10 Optional connections.

1.8 Universal connection cable (option)

Transducers are recommended to be 60 to 80 ohms and minimum 1kW. The universal connection cable should be applied for connecting one or two transducers to either ECHO1 or ECHO2 port.

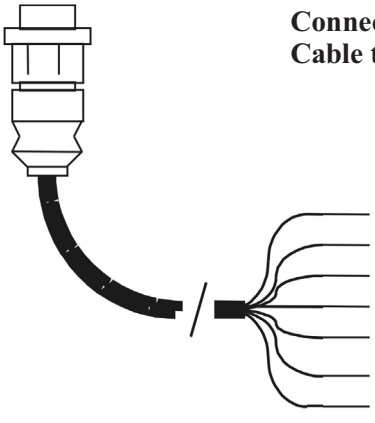

Connection cable (153-3004-002)
Cable type AMW STYLE 2464

Pin	ECHO1	ECHO2
1 Red	Speed log	Depth 1+
2 Black (brown)	VCC speed	Depth 1-
3 Blue	Depth 1+	Depth 2+
4 Shield	Shield	Shield
5 White (orange)	Depth 1-	Depth 2-
6 Green	GND*	GND (Temp.)
7 Yellow	Temp.	Temp.

*) Temp./Speed log

1.9 Installation of GPS / DGPS antenna

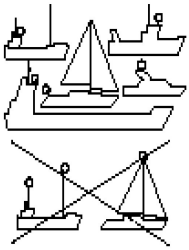

The antenna must be placed in a position where tall constructions, steel wires, masts, etc. do not obstruct the view to the satellites. Do not, however, mount the antenna in the top of a mast or tower, as this may degrade the COG and SOG readings, especially if DGPS is used. Do not place the antenna close to sources of electrical inteference, such as radar, satcom, etc. If installing the GPS antenna close to other antennas it must be placed either above or below the radiation beams. There is full coverage down to 20° below the horizon.

Avoid installing the GPS antenna inside the beam areas.

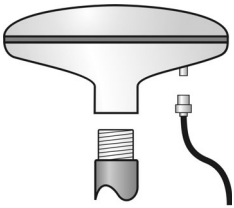

Mounting of DGPS antenna MGL-3
Mount the antenna on a standard US 1” 14 thread pipe, or optional standard antenna mount. Tighten firmly, but only by hand - no use of tools. Attach the antenna cable to the TNC socket.

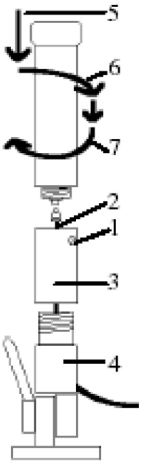

Mounting of GPS antenna RS5640
Loosen the screw (1) of the antenna adapter. Guide the antenna cable (2) through the adapter and connect it to the antenna. Screw the US 1” 14 mount adapter (3) firmly onto the optional antenna mount (4). Press (5) the antenna into the adapter and turn it (6) approx. 1/2 to 1 turn counter clockwise to “catch” the thread. Turn (7) clockwise 1 to 2 turns and firmly secure the antenna with the lock screw (1).

☞ Do not close the small ventilation hole at the bottom, and do not attempt to open the antenna.

1.10 Optional connections

General e.g. Autopilot or performance instruments
NMEA

Pin 6	White	TX A (DATA OUT)
Pin 7	Brown	TX B (RETURN)
Pin 8	Yellow	RX A (DATA IN)
Pin 9	Green	RX B (RETURN)

PC up/download

NMEA			SUB-D 9 pin
Pin 6	White	TX A (DATA OUT)	Pin 2
Pin 7	Brown	TX B (RETURN)	Pin 5
Pin 8	Yellow	RX A (DATA IN)	Pin 3
Pin 9	Green	RX B (RETURN)	Pin 5

Overview of various optional connections:

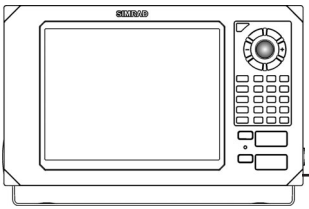

-Compass
-Dual Station DS44/54
-Performance Instruments
-Differential Beacon Receiver
-Water speed and temperature sensor
-Autopilot
-Yeoman digitizer
-PC - WPs & routes up/download
-Other equipment via NMEA0183, 0182, 0180

1.11 Basic transducer and cable information (CA & CE models)

For optimum performance of the Echosounder, the Simrad combi transducers C38/200 and C50/200 are recommended. These transducers also include a water temperature sensor. A variety of alternative medium-range transducers is available for vessels mainly operating in shallow waters and/or where the size of the transducer is critical.

The 1kW output signal from the echosounder is automatically reduced due to the difference of impedance in the transmitter, which is 75 ohms, and the transducer, which is 185 to 425 ohms. See section 8.2 Echosounder setup in the CE44/54 user manual, or section 9.2 Echosounder setup in the CA44/54 user manual, for correct setting for the transducer selected.
The CA & CE44/54's transmitter is designed to match Simrad 1kW 75 ohms high performance transducers described in section 1.11.1 Transducers.

The installation should be carefully planned in advance, keeping in mind the standard cable length of 10 meters (32 feet) which is connected to the transducer. In the event where the standard cable is not long enough, up to an additional 10 meters (32 feet) may be connected without a noticeable reduction of the performance. The cable must be of the same type as the standard cable.
☞ The CA & CE44/54 must be turned off while connecting/disconnecting the transducer cable.

The use of longer cable runs, while possible, always increases the likelihood of increased interference and decreased performance. Care must be taken when increasing the cable lengths to ensure that proper, adequate and consistent shielding is maintained, that cable of adequate cross section is used, and that all connections are properly made and protected from the effects of the marine environment.

If possible, running the transducer cable through a grounded conduit will greatly decrease the likelihood of interference. Likewise, the transducer cable should be run as far as possible from other electrical cabling. If it is absolutely necessary to pass close to other cabling, it is best to keep as much distance as possible, and to make all crossings as close to a right angle as possible.

⚠ **Warning!**
Transducers containing speed log sensor e.g. Airmar B744V must never be connected to the port "ECHO2". To avoid accidental connection, "ECHO2" is sealed with a small silicone plug, which of course is removable so e.g. a combi transducer can be connected.

1.11.1 Transducers (option)

Simrad Combi-transducers C50/200 or C38/200

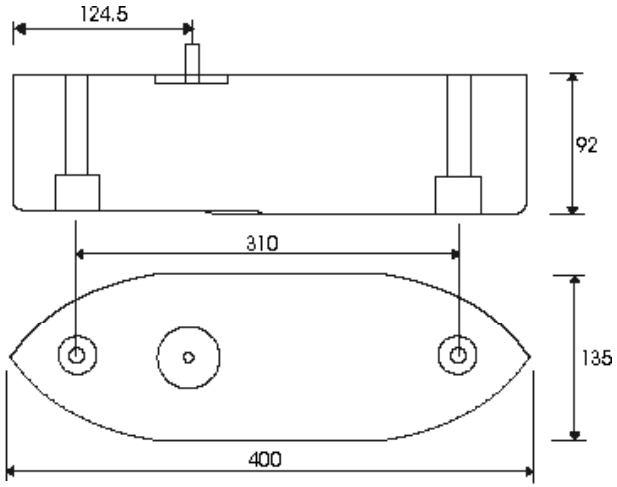

Combi C50/200 or C38/200 combines two transducers and a temperature sensor in one housing. It has a streamlined shape, designed for mounting onto the hull.

Frequency:	**50 and 200 kHz**	**38 and 200 kHz**
Beamwidth:	longitudinal 10° / 7° transverse 16° / 7°	longitudinal 13°/ 7° transverse 21° / 7°
Maximum pulse power input:	1000 W	1000 W
Maximum continuous power input:	10 W	10 W
Storage temperature:	max.70°C, min. –20°C	max.70°C, min. –20°C
Cable length:	10m (32’)	10m (32’)
Maximum transducer depth:	20 meters	20 meters
	Reference No. 700-3000	Reference No. 700-3001

Airmar P319

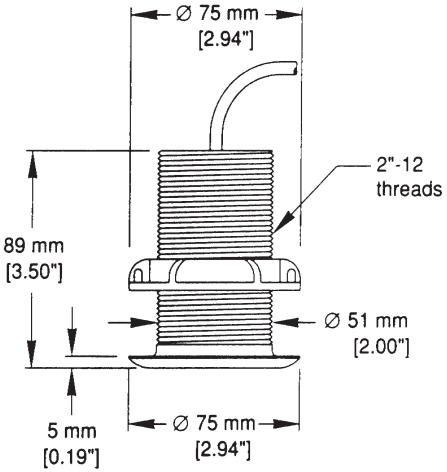

Thru-hull mount

Frequency: 50/200 kHz
Beamwidth: 45° / 15°
Cable length: 10m (32')
Depth information.

Reference no. 179-0401-002 (P319)
Housing: Reinforced plastic
Recommended for fiberglass and metal hulls. Do not use in wooden hulls!

Reference no. 179-0401-003 (B117)
Housing: Bronze
Recommended for fiberglass and wooden hulls.

Airmar P52

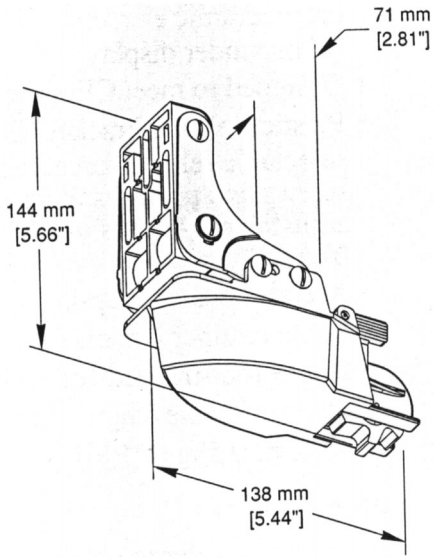

Transom mount

Frequency: 50/200 kHz
Beamwidth: 45° / 15°
Cable length: 10m (32')
Speed, temperature + depth information

Reference no. 179-0401-001
Housing: Chemical resistant, high impact plastic alloy.
Recommended for all type hulls.

☞ Do not connect to ECHO2 port.

Airmar SS505

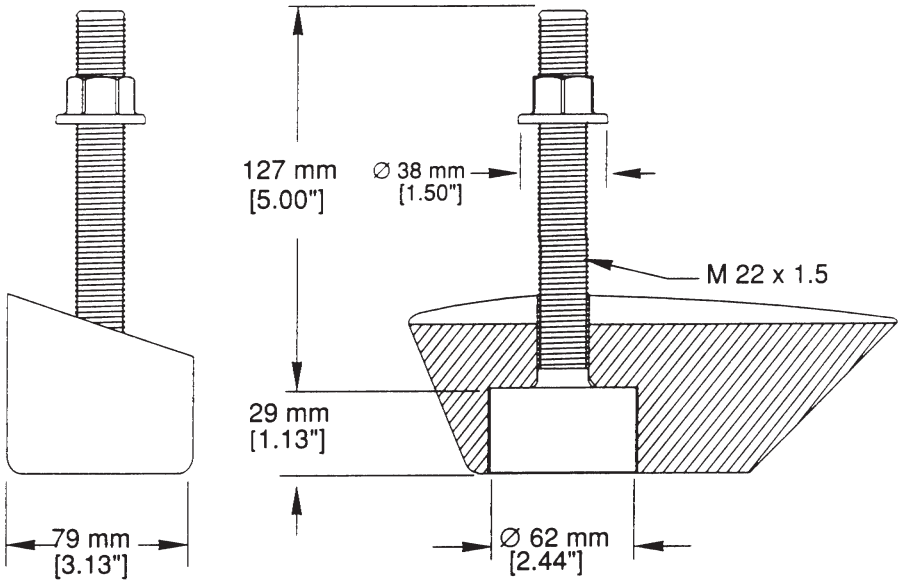

Ref.no. 179-0401-011
Optional fairing

Thru-hul stem mount

Accomodates hull thickness:
Min. no fairing 6 mm (1/4”),
Max. with fairing 83 mm (3 1/4”)

Frequency: 50/200 kHz
Beamwidth: 45° / 15°
Cable length: 10m (32’)
Depth information.

Ref.no. 179-0401-004 (B45)
Housing: Bronze
Recommended for fiberglass or wooden hulls only.

Ref.no. 179-0401-008 (SS505)
Housing: Stainless steel
Recommended for any hull material.

Airmar B744V

B44V top and side view

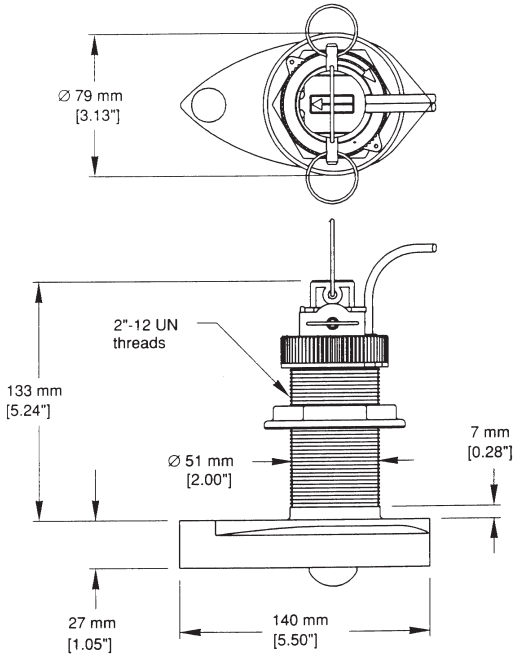

Thru-hull triducer

Frequency: 50/200 kHz
Beamwidth: 45° / 15°
Cable length: 10m (32')
Speed, temperature + depth information.

Ref.no. 179-0401-009 (B744V)
Housing: Bronze
Recommended for fiberglass and wooden hulls.

☞ Do not connect to ECHO2 port.

1.11.2 Determining the position for the transducer

The CA & CE44/54 is a sophisticated piece of electronic equipment, but how well it will perform under actual operating conditions will be largely dependent upon the location of the transducer and how it has been installed. Careful consideration, therefore, must be given to selecting the mounting location and on deciding the method of installation that best suits the vessel.

Air bubbles and turbulence caused by the vessel's movement through the water will seriously degrade the transducer's performance. Therefore the transducer should be located well clear of any water intake or discharge line and also clear of any projection along the hull line which might disturb the smooth flow of water. It is of profound importance for good performance of the CA & CE44/54 that the water flowing over the transducer be free of bubbles and aeration. If the transducer face is clean but the performance degrades with increasing vessel speed, then aeration of the water flowing under the transducer may be the cause of the poor performance.

Due to the varying design of ship's hulls and different operating speeds, there can be great variation in the amount of air bubbles which are carried beneath the hull. These bubbles tend to be carried close to the hull as they pass aft. For this reason, it is desirable for the transducer to be mounted on a fairing block which holds the transducer away from the hull and which directs the flow of aerated water around the sides of the transducer rather than over the face of the transducer.

On deep keeled vessels, care must be taken to ensure that the transducer beam will not be blocked by any part of the keel. Although the appropriate mounting location that meets all requirements depends on the type of vessel and its normal operating speeds, a practical choice is usually somewhere between one third and one half of the vessel's water line length from the bow. Leveling blocks may be designed accordingly to meet this requirement.
☞ The more the transducer protrudes from the hull, the better the results will be.

Particularly at lower frequency operation (38 and 50kHz), interference from propeller noise can be a significant problem. This can be seen as an increase in the "noise" on the echosounder display when the propeller speed is increased. To help reduce this, the transducer's mounting face may be angled slightly forward on the order of 3-5°. The goal is to incline the transducer so that a line of sight along the transducer's radiating surface passes below the propeller.

☞ Keeping the propeller clean and free of any nicks or roughness will assist in minimizing interference from propeller noise due to cavitation.

Sources of noise to consider:

Water/air noise	Acoustic noise	Electrical noise
Air bubbles Turbulence Propeller	Main engine Reduction gear propeller shaft Generators auxiliary engines Power plant for freezers Hydraulic pumps Rudder engine Bow thruster Stern thruster	Noise from electrical cables Noise from generators Poor grounding of instrument Radiated noise from other instruments Dc – Dc converters Electrical winches Neon lights etc.

1.12 Installation of scanner unit (CA & CR models)

A radar's target detection capacity varies greatly depending on the fitted position of the scanner. An ideal fitting position is a location high above the ship's keel line where there is no obstacle all around the scanner. In an actual ship, such an ideal location is limited by various factors. Therefore, consider the following suggestions when you determine the place to install the scanner:

A. Install scanner at a position as high as possible
The higher the installation position, the longer the radio ranging distance. Install the scanner at a position as high as possible after considering the ship's hull structure and radar maintainability.

B. Install scanner away from smoke-stack and mast
If the scanner is installed at the same height as the smoke-stack or mast, radar waves may be blocked, crating shadow zones or generating false echoes. Therefore, do not install the scanner at such a position.

C. Install scanner forward away from obstacle
To avoid creating shadow zones or generating false echoes, install the scanner at a position nearer to the ship's bow away from obstacles. When installing the scanner on a mast, position it in front of the mast. (If obstacles cannot be avoided for the ship's structural reasons, refer to "Shifting away from obstacles" described in section 1.12.1.

D. Do not install the scanner near hot or heat-generating items
Do not install the scanner at a position where it may be subjected to smoke or hot air from smoke-stacks or heat from lamps.

E. Install the scanner away from antennas or other equipment
Install the scanner as far away as possible from the antennas of a direction finder, radio transceiver, etc..

1.12.1 Shifting away from obstacles

Shifting from keel line: By shifting the scanner position from the keel line to the starboard side of the ship, it is possible to move shadow zones to the port side which makes it possible to keep a clear vision in the bow direction. The distance to be shifted can be obtained by calculation depending on the distance from the scanner to obstacles using the following equation:

Ls=0.4R+D/2 [m] (when R<15m)
Ls=0.025R+D/2 [m] (when R>15m)
where Ls= distance to be shifted from keel line
D= diameter of obstacle on keel line
R= distance from scanner to obstacle

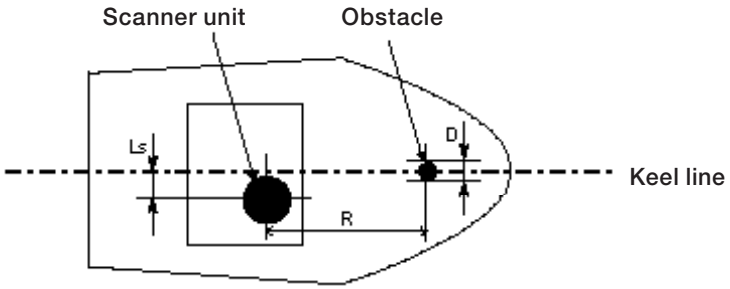

Obtaining sufficient dip angle: Raise the scanner position so that there is a sufficient dip angle available between the line of sight from the scanner to the obstacle and the horizontal line. By raising the dip angle above 5° it is possible to prevent mid and long distance shadow zones. The radar cannot detect objects below the line of sight.

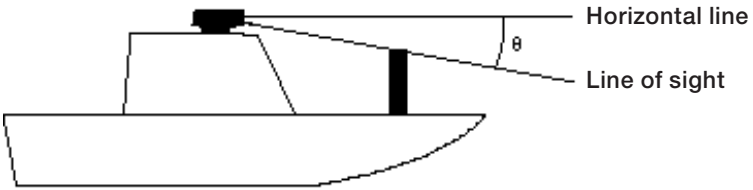

1.12.2 Mounting of scanner

Deciding the place of installation, a minimum distance must be considered to the master compass (2 meters) and steering compass (1.4 meters). If a mount base like the one shown below is available, it may be easier to install the scanner. If not available, you may install the scanner directly to the roof, etc. In this case, pay attention to the water drain tube located at the bottom of the scanner unit during installation.

☞ When the radar mast or mounting bracket has a curvature of more than 2mm, repair it or use spacers.

Mount base

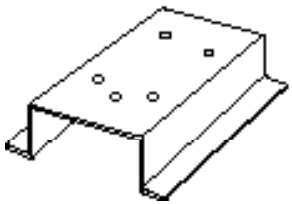

Do not use an edge that might trap water

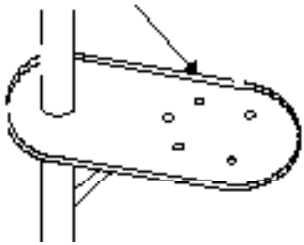

Which size bolts to use for mounting of scanner unit:

Thickness of mount base	*Bolt requirement*	*Material*	*Remarks*
1-4mm(0.04-0.16 in.)	M10 × 15 (1.5mm pitch)	Steel	
4-9mm(0.16-0.35 in.)	M10 × 20 (1.5mm pitch)	Steel	
9-14mm(0.35-0.55 in.)	M10 × 25 (1.5mm pitch)	Steel	Incl. with radar
14-19mm(0.55-0.75 in.)	M10 × 30 (1.5mm pitch)	Steel	

RB714A Radome scanner

- 45cm radome
- 2kW
- Range up to 24nm
- Rotation speed 24rpm
- Beamwidth: Horizontal 5.9°
  Vertical 25°

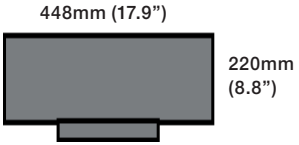

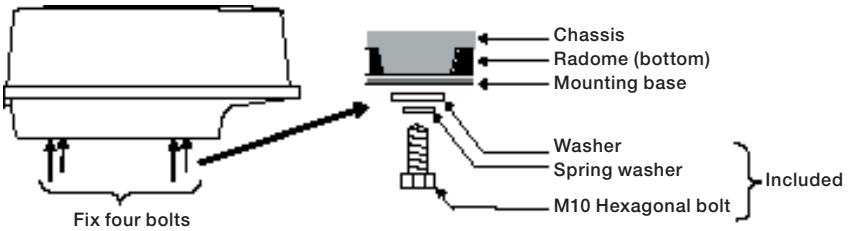

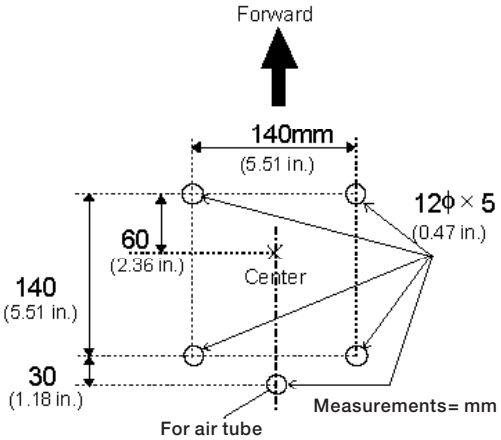

Drilling template for RB714A

The bolts included with your radar equipment will suffice for mount base thickness of 9 to 14mm (0.35 to 0.55 in.). If the mount base is thicker or thinner than this, prepare bolts as listed on the previous page.

Silicone should be applied to secure the bolts. Do not use locking putty, as it may damage the radome.

RB715A Radome scanner

- 65cm radome
- 4kW
- Range up to 36nm
- Rotation speed 24 or 48rpm
- Beamwidth: Horizontal 3.9°
  Vertical 25°

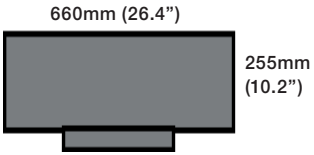

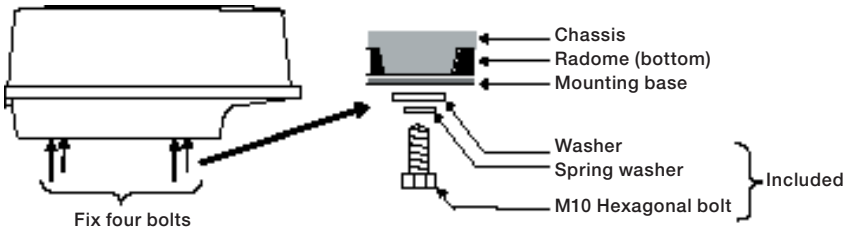

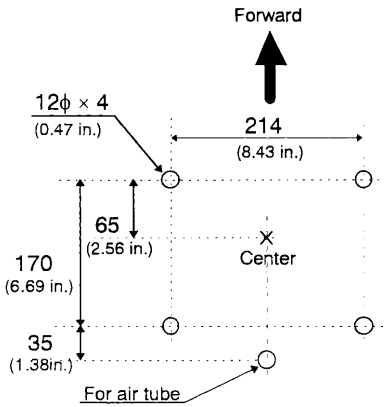

Drilling template for RB715A

The bolts included with your radar equipment will suffice for mount base thickness of 9 to 14mm (0.35 to 0.55 in.). If the mount base is thicker or thinner than this, prepare bolts as listed on the previous page.

Silicone should be applied to secure the bolts. Do not use locking putty, as it may damage the radome.

RB716A Open scanner

- 3 or 4ft Open array
- 4kW
- Range up to 48nm
- Rotation speed 24 or 48 (24V) rpm
- Beamwidth:
  Horizontal 2.5°, 1.8°
  Vertical 22°

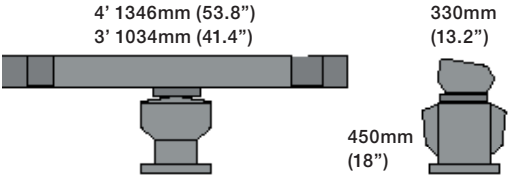

RB717A Open scanner

- 4 or 6ft Open array
- 6kW
- Range up to 72nm
- Rotation speed (24V) 24 or 48 rpm
- Beamwidth:
  Horizontal 1.8°, 1.2°
  Vertical 22°

RB718A Open scanner

- 4 or 6 ft Open array
- 12kW
- Range up to 96nm
- Rotation speed (24V) 24 or 48 rpm
- Beamwidth:
  Horizontal 1.8°, 1.2°
  Vertical 22°

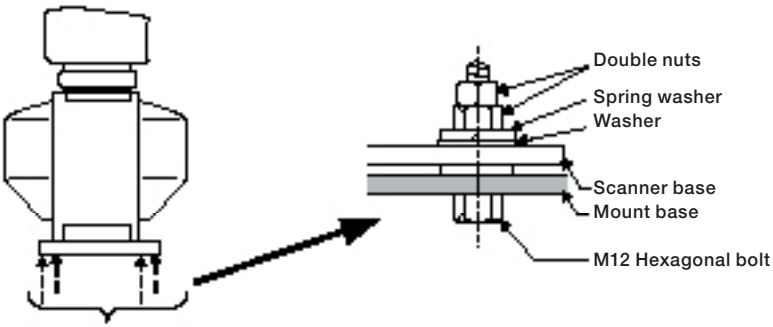

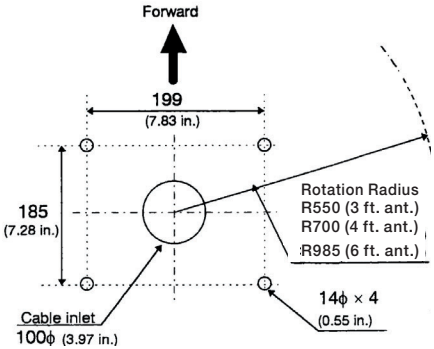

The bolts included with your radar equipment will suffice for mount base thickness of 9 to 14mm (0.35 to 0.55 in.). If the mount base is thicker or thinner than this, prepare bolts as listed on the previous page.

Silicone should be applied to secure the bolts. Do not use locking putty, as it may damage the radome.

Drilling template for RB716A, RB717A, RB718A.

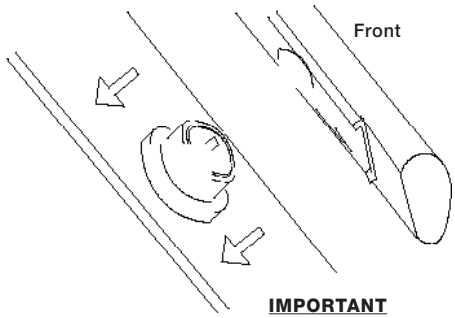

Remove the protective cap covering the rotary coupler on the top of the scanner. Match the antenna radiation direction to direction of the arrow on the rotation base and fix the antenna in position using the four M8 accessory bolts.

IMPORTANT

1.12.3 Connecting cables (length of cables – see 1.13 Specifications)

Run the cables by following the instructions below:

- Do not bind the cable for the radar collectively with cables of other equipment (especially the power supply cable).

- The cable has a connector fitted on the display and scanner side.
  If it is necessary to pass the cable through a narrow path, then fix the scanner side connector vertically by using vinyl tape before guiding the cable through the path.

- Run the cable along the ship's hull or wall surface, and fasten it at intervals of about 40 cm.

Interconnecting cable (RB714A + RB715A)

Remove the upper part of the radome from the scanner unit. Avoid bumping it against the antenna by lifting vertically (there are four fixing screws). Remove the tape securing the antenna. Remove the shield cover located on the astern side (four fixing screws). Remove the cable clamping plate and rubber ring, pass the

cable through the cable inlet, place the rubber ring around the cable, and clamp the cable to the scanner unit with screws via the fixing plate.
See 'Fitting interconnecting cable' for RB714A and RB715A further on in this section.

RB714A: Connect 10-pin connector to X1.
RB715A: Connect 7-pin connector to X11 and 9-pin connector to X12 of PCB.

Replace the aluminum cover: Attach a cable shield onto a ditch with the aluminum cover. Be careful that the cable does not get caught between main unit and cover, and that the antenna is free to rotate.

Replace the upper part of the radome: Be careful not to bump it against the antenna. Be sure that the cover is fitted in the correct direction (refer to below illustration). Align the upper and lower parts with the holes for the screws.

Ensure that the radar is off. Connect the cable to the receptacle marked RADAR on the rear panel of the display unit.

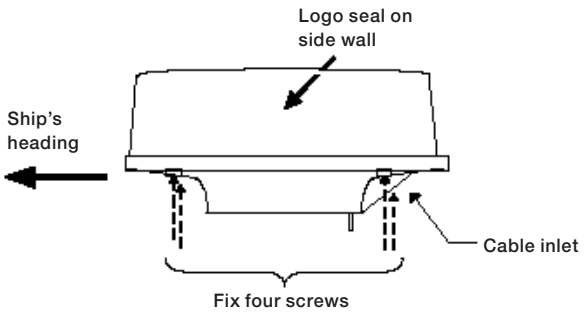

Fitting interconnection cable (RB714A):

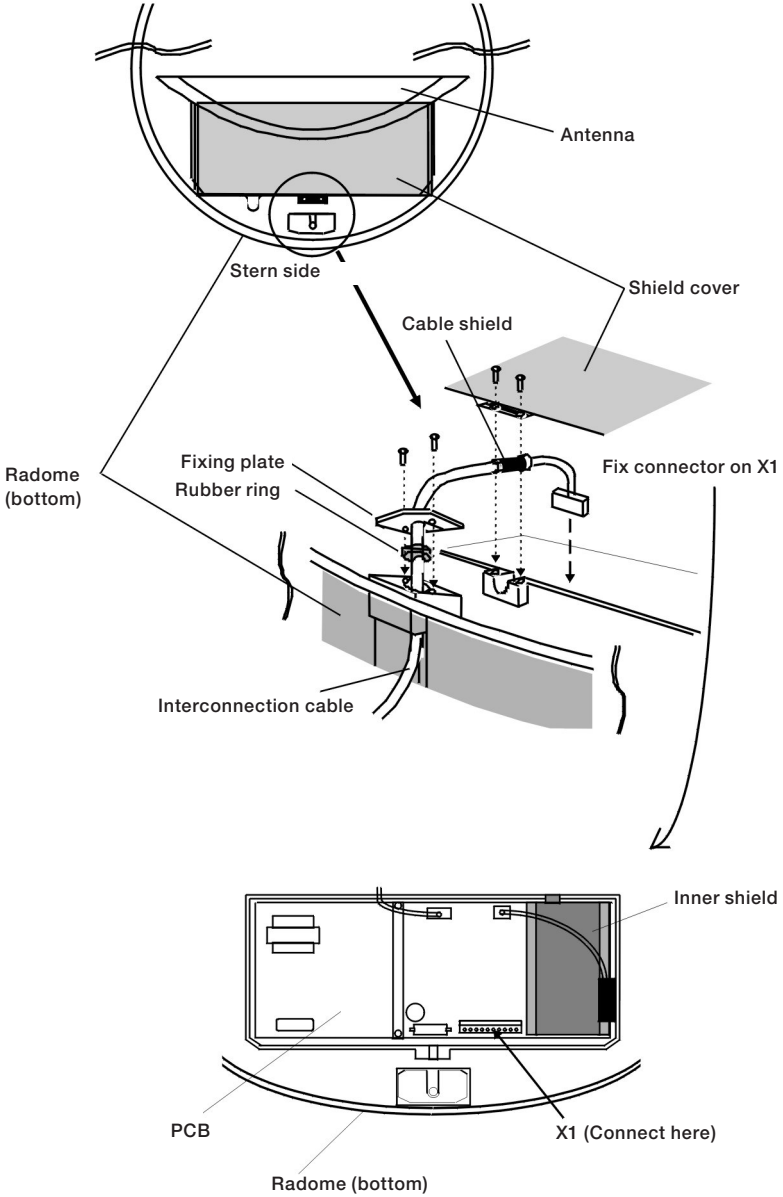

Fitting interconnection cable (RB715A):

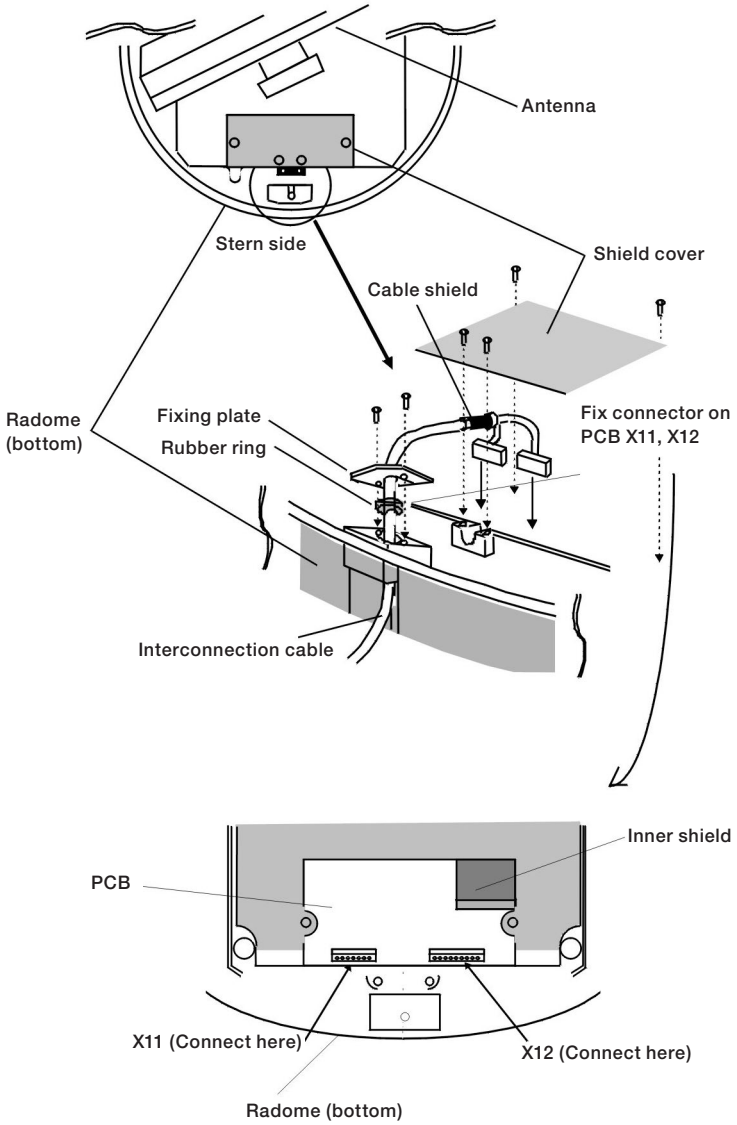

Interconnecting cable (Open Scanner)

1. Use a T-wrench to remove the back covers of the scanner unit.

2. Remove the two bolts securing the transceiver and pull out the transceiver after removing two connectors (to Motor (X1), to Heading switch (X2)).

3. Remove the four bolts securing the fixing plate at the cable entrance.

4. Remove the metal fixing plate, rubber seal and washer that secures the cable.

5. Pass the cable through as shown in the diagram below.

6. Replace the above items and tighten the bolts.

7. Return the transceiver to its original position and secure it with the removed bolts.

8. Connect 7-pin connector to X11 and 9-pin connector to X12 of PCB.

9. Re-connect the two connectors removed at point 4.

10. Refit the scanner covers.

11. Take care the cable is not pinched when refitting the cover.

12. Ensure that the radar is off.

13. Connect the cable to the receptacle marked RADAR on the rear panel of the display unit.

☞ See ‘Fitting interconnection cable’ on next page.

Fitting interconnection cable (Open scanner):

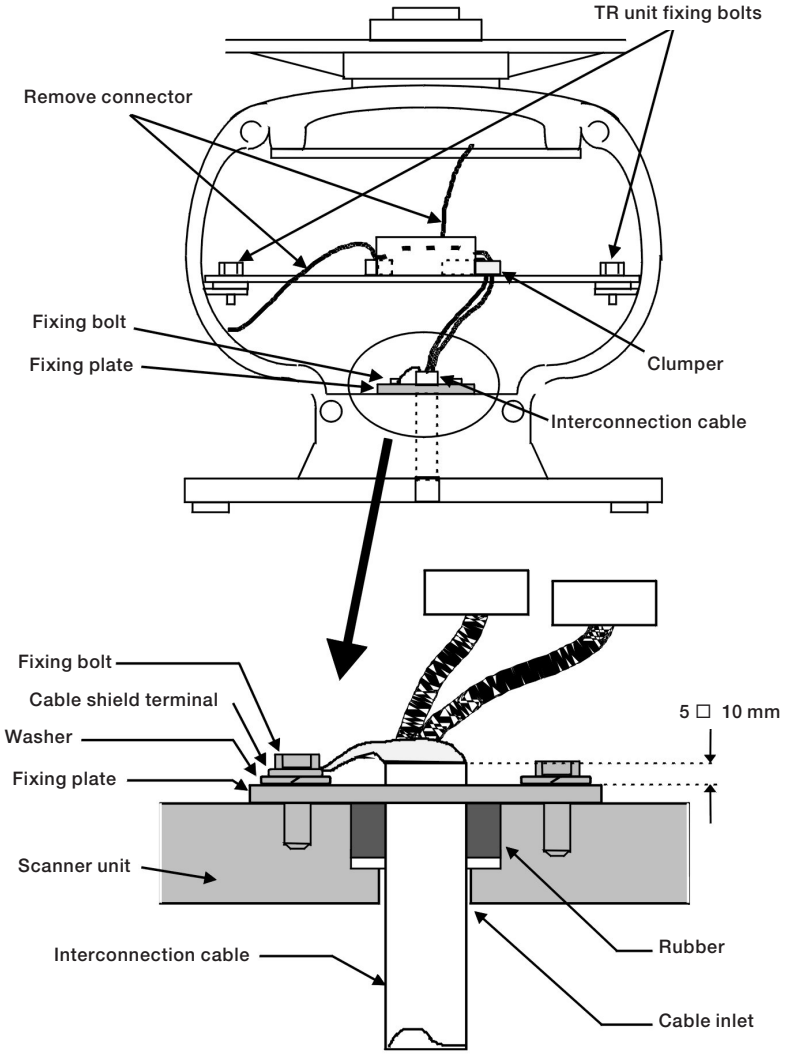

1.12.4 Connector's pin numbers and wire colors

The connecting cable is supplied with the radar antenna. The 18-pin round connector is connected to the main unit's receptacle marked RADAR – refer to section 1.7 for details on pin numbers.
The connector at the other end of the connecting cable is for the radar antenna, and consist of the following pin numbers and wire colors:

Connector for the RB714A Radar antenna

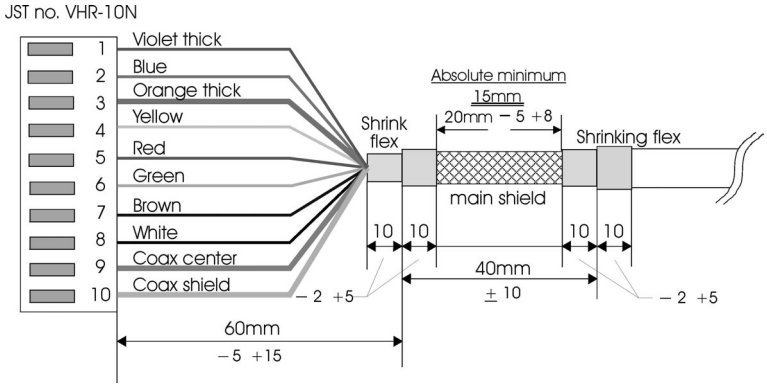

Connector for the RB715A Radar antenna

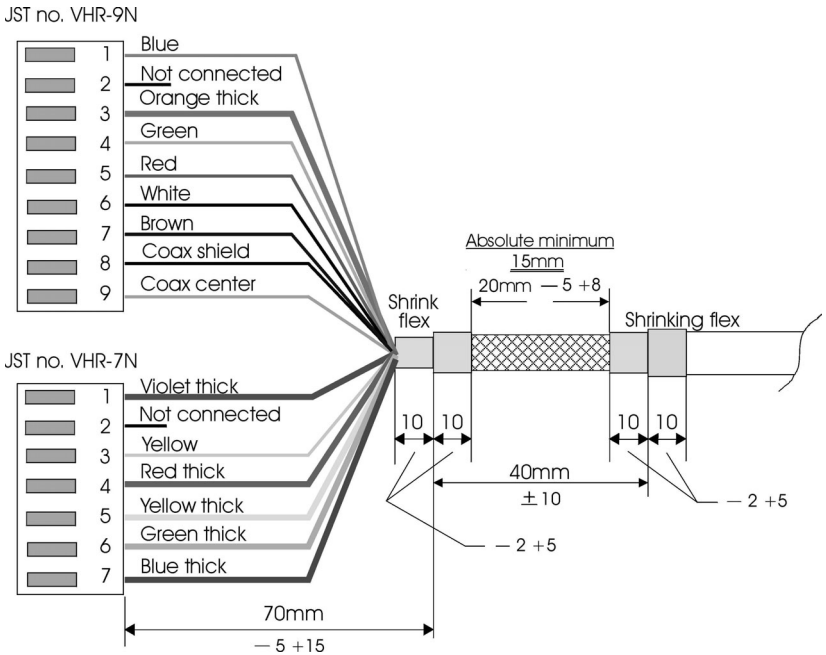

Connector for the Open Scanners (RB716A, RB717A, and RB718A)

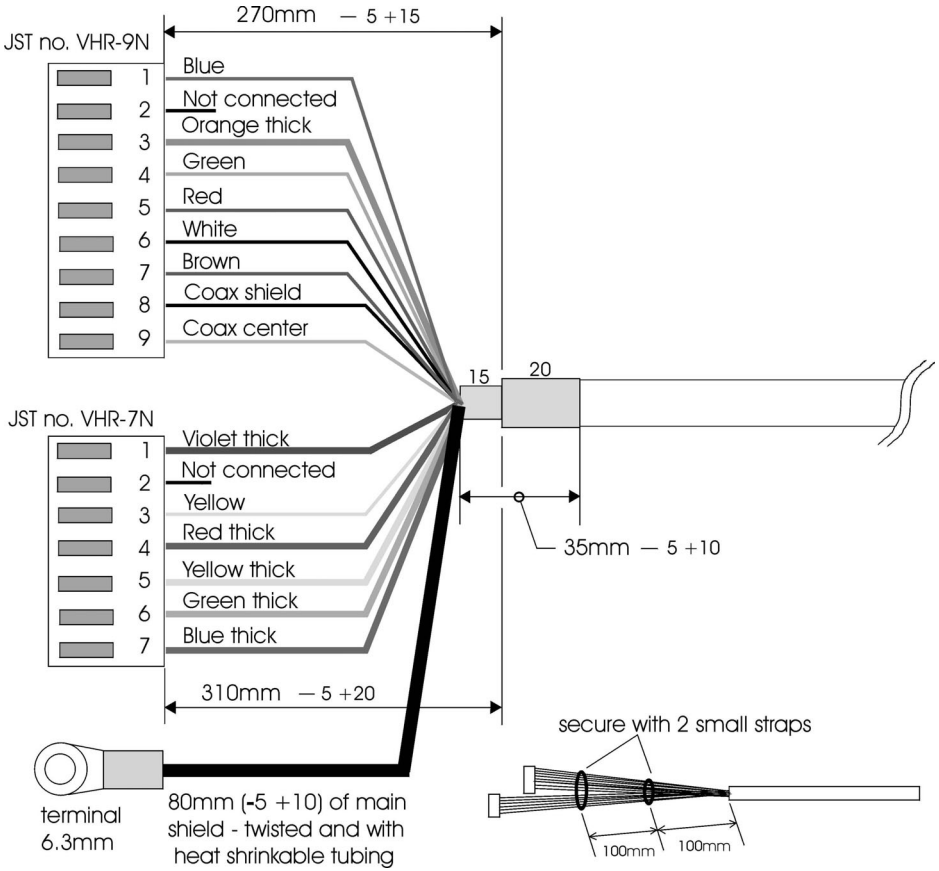

1.12.5 Grounding wire

Connect grounding wire from one of the bolts used for mounting the scanner unit to ship's hull. The crimp terminal and grounding wire are not included with the radar equipment.

Radome

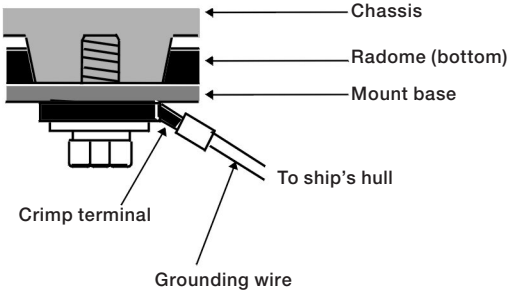

Open scanner

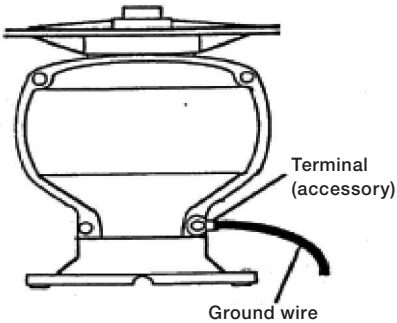

1.12.6 Initial adjustments of radar function

When you have finished installing the scanner and display units and connecting cables, turn on the power to the display and scanner units and check to see if they operate normally without problem. Then make adjustments according to details in section 3.2.2 Initial radar display setup in the user manual. Be sure to follow these adjustments or the radar picture will not display a true image.

1.13 Specifications of the CA/CE/CP/CR44 & 54

General data

Power supply:	12 and 24 V DC (10-32 V DC max) 20 - 70 watts + Radar supply box to run radar antenna - see below.
Power cable:	With fuse F6.3A, 4 pin connector, 2 m (153-5000-006)
Dimensions:	XX44: H:220 mm (8.8”) L:365 mm (14.6”) D:75 mm (3”) XX54: H:330 mm (13”) L:460 mm (18.1”) D:95 mm (3.7”)
Weight:	XX44: 3.7 kg (8.1 lbs), XX54: 6.6 kg (14.5 lbs)
Environment:	0 to +50°C, waterproof USC 46 CFR and IP55
Housing:	Casted aluminum back, polycarbonate front
Display:	TFT/ATFT color, power backlight, 640x480 pixels, XX44 = 10.4 in., XX54 = 15 in.
Interfacing:	2 ports in/out NMEA 0183/0182/0180 PC up/download WPL and RTE 1 port NMEA 2000 (optional)
- alarm:	Alarm relay (contact closure)
- log out:	200 pulses/nm (5 Volt pulses)
Main fuse:	F6.3A

Radar supply box RS4050 to run radar antennas RB714/5/6A

Addendum:	183-0700-003
Dimensions:	H:125mm, L:222mm, D:81mm
Power supply:	12 and 24 V DC (10-32 V DC max)
Fuses:	Radar supply fuse 4A F Main fuse 6A.3F High voltage fuse 160 mAF Radar motor fuse 6A.3F

Radar supply box RS4052 to run radar antennas RB717/8A

Addendum:	183-0700-004
Dimensions:	H:161.9mm, L:263mm, D:91mm
Power supply:	24 V DC (18-32 V DC max)
Fuses:	Radar supply fuse 10 AT
	Main fuse 6A.3F
	High voltage fuse 200 mAF
	Radar motor fuse 3.16AT

GPS section

Receiver type:	14 channel parallel, C/A code, 8 state Kalman filter	
Accuracy:	Position (DGPS):	2-5 m RMS
	Position (SDGPS):	3-7 m RMS
	Position (GPS):	8 m RMS
	Speed:	0.1 kn
	Course:	1°
Speed filter:	10 settings	
Update rate:	1 second interval, typical	
Dynamics:	Velocity:	600 km/h
	Acceleration:	10 m / s^2

	GPS antenna RS5640	**DGPS antenna MGL-3**
Type:	Quadrifilar Helix	Patch and H-field
Dimensions:	L:230 mm	H:75 mm
	D:38 mm	D:127 mm
Weight:	150 g (0.33 lbs)	600 g (1.3 lbs)

Environment:	-35°C to +75°C, 95% rel.
Mounting:	1” 14 thread (standard US)
Cable:	10 m RG58 (standard), 15 m RG58 (option), max. 30 m RG213

Chartplotter section

Chart system:	C-MAP NT+
Presentation:	Dual chart - two charts in individual scales and detail levels
Internal memory:	Dynamic storage with combinations of/or totals up to:
	35,000 marks/waypoints
	10,000 waypoints with name (25 characters)
	50,000 trackpoints
	50,000 line sections
	1,000 routes

Radar section

Display modes:	Head Up, North Up, True Motion, Dual Range.
Range scale:	0.125 – 48nm in 11 steps or multi range.
Min. range:	30 meters
Range resolution:	30 meters
Bearing accuracy:	1° or better
Off-center:	Max 66%.
Guard zone:	Can be set at any desired distance and angle in any desired width. IN and OUT modes are available.
Stretch:	AUTO, PULSE, VIDEO.
Trail (wake):	30 sec., 1, 2, 5, 10, 15, 30 min. or permanent.

Radar radome antennas		**RB714A**	**RB715A**
Radome:		45cm	65cm
Scanner:		2kW	4kW
Range:		to 24nm	to 36nm
Rotation speed:		24rpm	24 or 48rpm
Beamwidth:	Horizontal	5.9°	3.9°
	Vertical	25°	25°
Cables:	10m	104.3002.012	104.3002.015
	15m	104.3002.013	104.3002.016
	20m	104.3002.014	104.3002.017
	30m	104.3002.314	104.3002.317
	40m	104.3002.414	104.3002.417

Radar open antennas		**RB716A**	**RB717A**	**RB718A**
Open array:		3 or 4 ft	4 or 6 ft	4 or 6 ft
Scanner:		4kW	6kW	12kW
Range:		to 48nm	to 72nm	to 96nm
Rotation speed:		24 or 48 (24V) rpm	24 or 48 (24V) rpm	24 or 48 (24V) rpm
Beamwidth:	Horizontal	2.5°, 1.8°	1.8°, 1.2°	1.8°, 1.2°
	Vertical	22°	22°	22°
Cables:	10m	104.3002.008	104.3002.008	104.3002.008
	15m	104.3002.009	104.3002.009	104.3002.009
	20m	104.3002.010	104.3002.010	104.3002.010
	30m	104.3002.030	104.3002.030	104.3002.310
	40m	104.3002.040	104.3002.040	104.3002.410

Echosounder section

Frequencies: 38, 50 and 200 kHz, selectable
Output power: Variable up to 1kW RMS per channel
Impedance: 75 ohms
Display ranges: 3 to 3000 m in 21 steps, manual and auto mode
Detection ranges:

Frequency	Beam	Fish*	Bottom*
38 kHz	13x21°	410m	1800 m
50 kHz	10x16°	430m	1500 m
200 kHz	7°	280m	400 m

*Single Fish Target Strength: -30dB (60cm cod)
*Bottom Back Scattering Strength: -20dB
*Simrad transducer C38/200 or C50/200

Pulse length: Short, medium, long and auto
Transmission rate: 10 pings per second
Alarms: Fish, max. and min. depth
Zoom mode: Shift, bottom and VRM expansion, 3 to 50 meters, feet or fathoms
Event marker: At current ping and depth memory
Picture speed: True distance or time, high, medium, low, and freeze
Noise filter: User selectable on/off
Echo presentation: A-scope and white line discrimination
Temperature: Sensor or NMEA
Speed: Sensor or NMEA

Dual frequency transducers

Simrad C38/200, 1kW high performance combi transducer 38 and 200kHz, 13x21° and 7° beams.
Simrad C50/200, 1kW high performance combi transducer 50 and 200kHz, 10x16° and 7° beams.
Airmar B260-22, 1kW combi transducer 50 and 200kHz, 19° and 6° beams.

Alternative 50/200kHz medium-range transducers (Airmar Des.A)

B256: 1kW medium range transducer, 16x28° and 4x6° beams.
B45: 600W bronze stem mount transducer, 45° and 15° beam.
B744V: 600W bronze thru hull triducer, depth, speed and temperature, 45° and 15° beam.
P66: 600W plastic transom mount triducer, depth, speed and temperature, 45° and 15° beam.
P319: 600W plastic thru-hull transducer, 45° and 15° beam.
ST650: Speed and temperature only.

Cables included

Power cable, 2 m, 4-pin female connector, incl. fuse F6.3A (153-5000-006)
NMEA2 cable, 1.5 m, 9-pin female connector (153-3002-005)
Antenna cable, 10 m RG58

Options

Simrad DataCards
C-MAP NT+ electronic charts
TL50 TurboLoader, external disc drive and NMEA interface
6-channel NMEA Buffer RS5345
NMEA1 cable, 1.5 m, 9-pin male connector (153-3002-004)
Universal connection cable for echo transducer, 2 m (153-3004-002)
Antenna cable 15 m RG58
DS44 Dual Station, 10” TFT/ATFT LCD color screen, incl. 15 m cable (153-3002-023) - max. length 25 m.
DS54 Dual Station, 15” TFT LCD color screen, incl. 15 m cable (153-3002-023) - max. length 25 m.
Sunhood